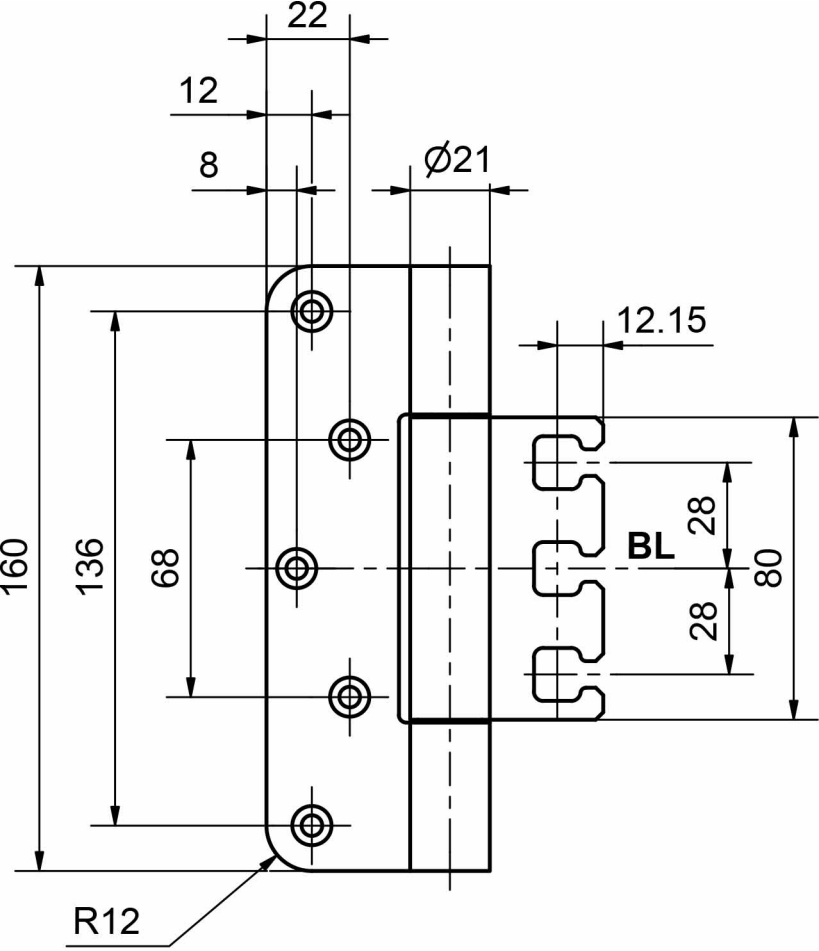
22
12
8
Ø21
12.15
160
136
68
28
BL
80
28
R12

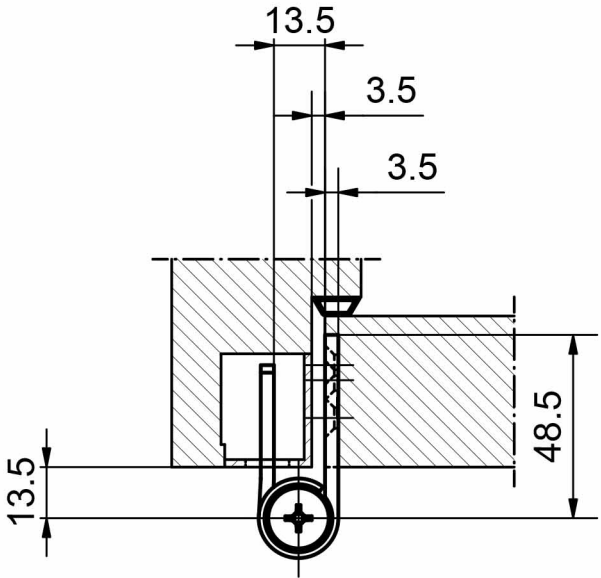
13.5
3.5
3.5
48.5
13.5