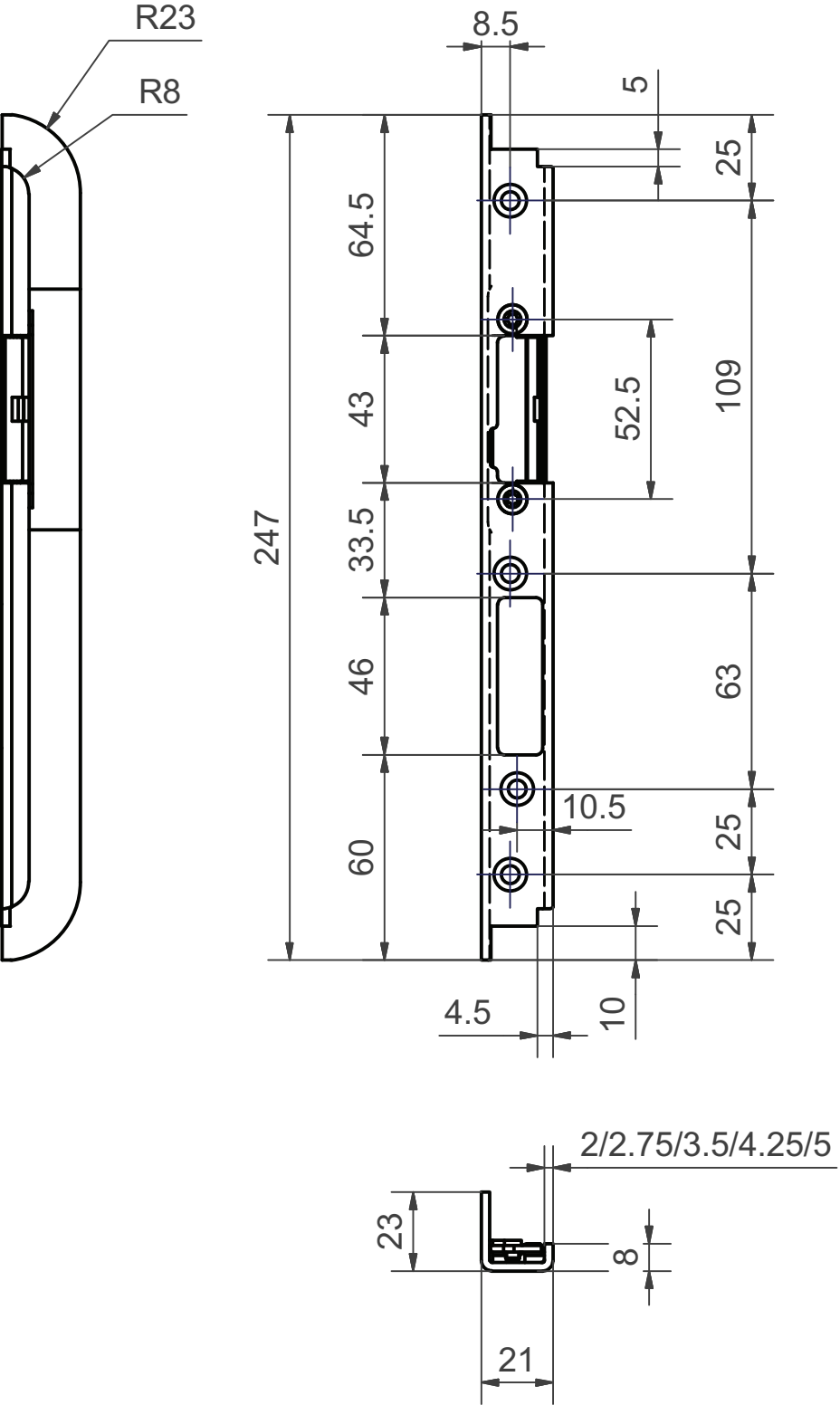
R23
R8
8.5
5
25
64.5
43
52.5
109
247
33.5
46
63
10.5
25
60
25
4.5
10
2/2.75/3.5/4.25/5
23
8
21