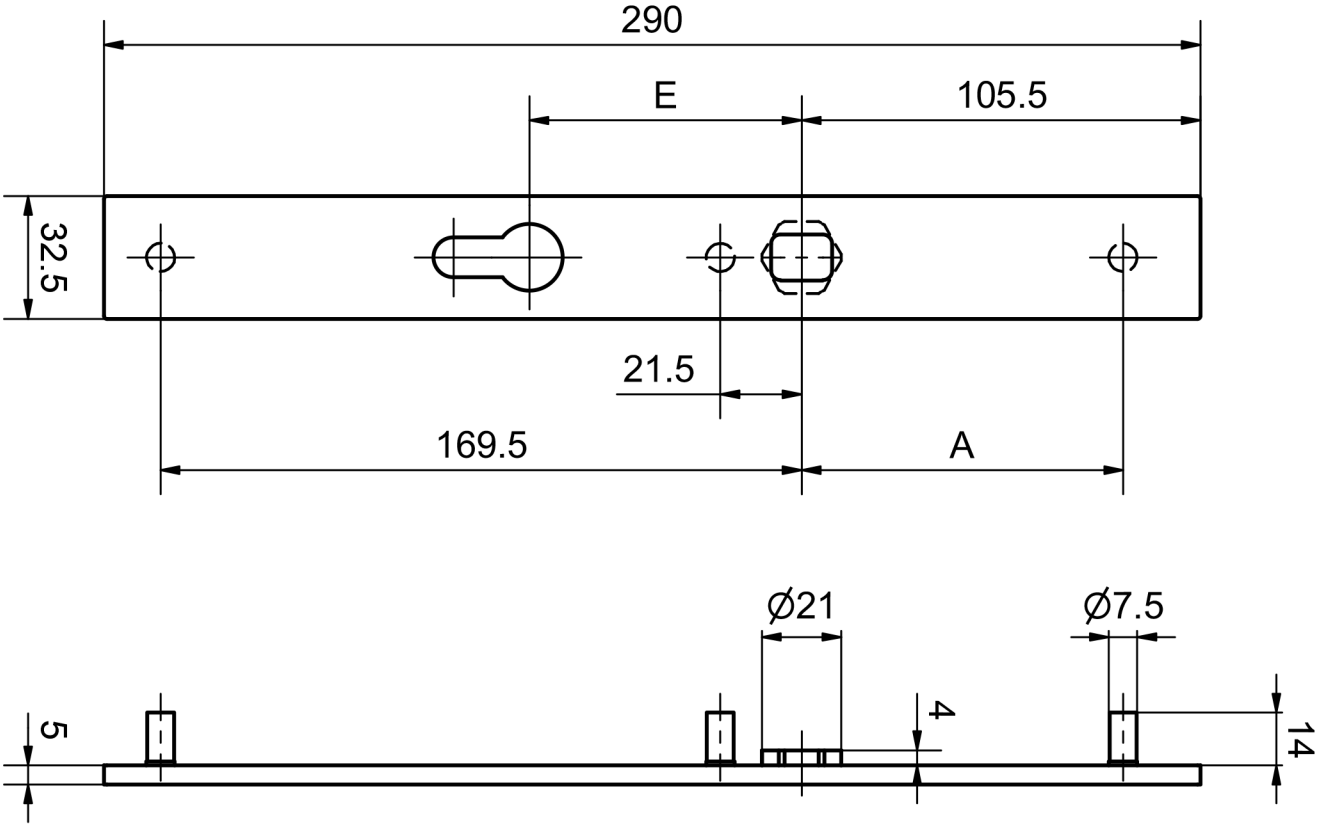
290
E
105.5
32.5
21.5
169.5
A
Ø21
Ø7.5
5
4
14